generations *sleepers*

Mattress *Features & Benefits*

- **75" length** versus the usual 72" for extra length.
- **312 coil / 13 gauge innerspring construction** for deep down support.
- **Double tempered innerspring unit** to prevent sagging and setting.
- **Easy folding storage** enabled by hinged innerspring unit.
- **Resin bonded fiber pads** – one on each side to eliminate coil feel.
- **Luxurious layers of foam** providing deep down comfort.
- **A thick layer of foam and continuous fiber** quilted for sensitive surface comfort.
- **Quilted borders** – for extra strength and attractiveness.
- **Jacquard Damask cover** for elegance.
- **Flange construction** adds durability and firmness.
- **6" deep overall mattress thickness** – to provide traditional bedding comfort in the space of a sleeper.

Mechanism *Features & Benefits*

- **Tubular Construction** possesses a superior strength to weight ratio over angle iron, and exceeds the performance of current angle iron sleeper products.
  - improves side-to-side stability
  - reduces number of sharp edges and pinch points found with angle iron sleepers
  - lowers risk of floor damage
- **Axle Riveting Design** provides a stronger, more durable rivet which enhances the mechanism's performance.

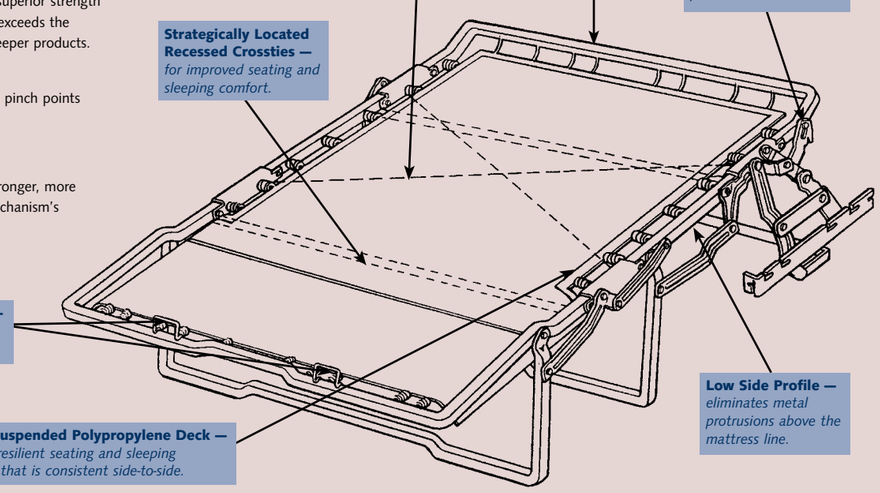

Seating Comfort

- **Recessed deck sew line** eliminates seat crown, prolongs cushion life and provides consistent seating firmness.
- **Contoured seat section** offers wider seating area with improved seating comfort next to the arms.
- **Extended deck coverage** protects the cushion from coming in contact with the metal components of the mechanism.
- **Hemmed and double stitched deck** adds strength and visual appeal.
- **Tempered helicals** assists in providing a resilient seating and sleeping foundation.
- **Unique seat pitch adjusters** optimize seating comfort by permitting adjustment of the seating area.

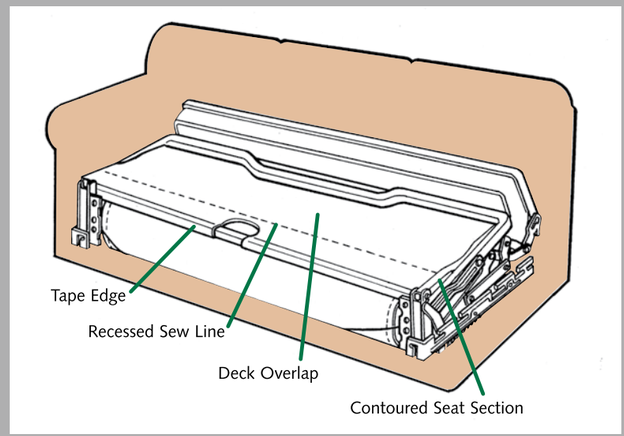

Convenience

- **Weight balanced linkage design** provides easiest operating mechanism available.
- **One-piece front leg locking system** allows easy opening from either side and prevents premature opening.
- **Taped edge handle cut-out** eliminates rough edges, enhances appearance and offers easier access.
- **Easy underside access** for cleaning – well-balanced mechanism permits tilting up the frame while the mechanism is open.

HARDEN